Kytun

Technical Data Sheet

Issue Date: August 2024

Aluminium

Performance Plus+ Tile Dry Verge Trim (T2)

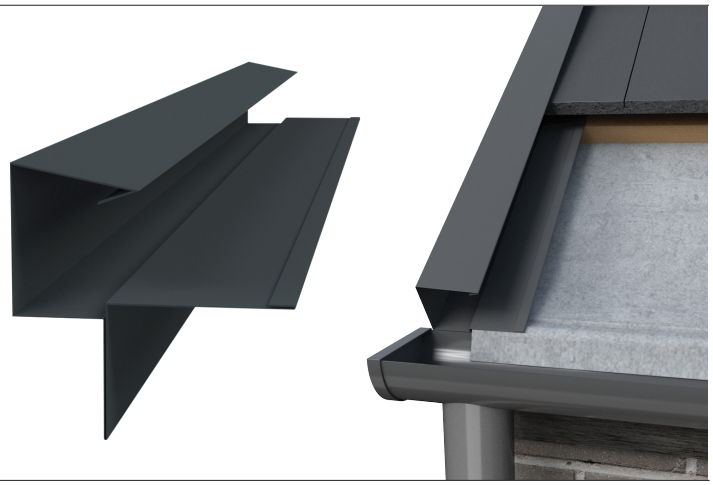

The Kytun Performance Plus Tile Dry Verge System (T2) can be used with all flat interlocking tiles and plain tiles. This system permanently secures tile applications on gable ends protecting the verge from wind uplift and rain. Manufactured using high grade pre-primed polyester coated aluminium.

Our Kytun Performance Plus Tile Dry Verge System (T2) helps to create a seamless and clean dry verge detail and an aesthetically pleasing finish to gable ends on your next roofing project. This weathertight system ensures water cannot penetrate, providing an enhanced level of protection for all your roofs. The unique design can replace one of the 2 mechanical fixings of the tiles along the verge by securing them in place in accordance with BS5534. As well as being weatherproof, strong and durable, the Performance Plus Tile Dry Verge System (T2) is also maintenance-free.

Features & Benefits

- Permanently secures tiles along the verge edge
- Provides full driving rain protection as demonstrated by independent BRE testing.
- Integrated 'drain channel' which allows for self drainage of rain water into the eaves gutter.
- Extremely easy and quick to install.
- Requires no maintenance once installed.
- Can be fully customised.
- Extensive range of colours available.
- Internal jointer available
- 30yr aluminium durability warranty and 20yr colour warranty

Technical Details

Product Code	C08TS / C08T / C08TL
Colour	Blue/Black, Black, Brown
Material	Polyester Coated Aluminium
Pack Qty	4
Pack Weight	6Kg

Colour options

Blue/Black Black Brown

Quality Standards & Certification

IRE +353 (0)7491 39500 UK +44 (0)1684 293702 kytun.com

Kytun

Technical Data Sheet

Issue Date: August 2024

Profiles

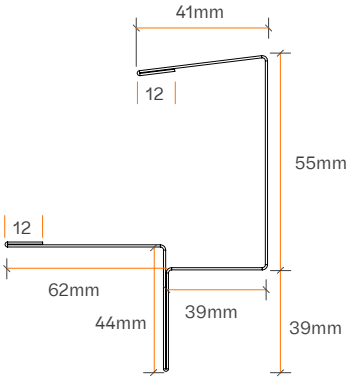

C08TS - 45mm

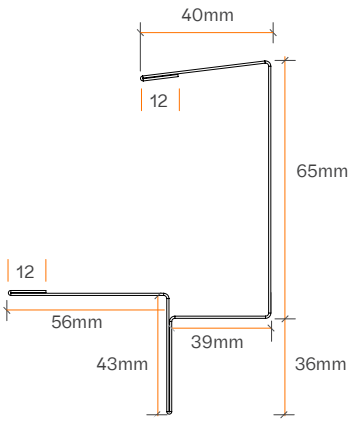

C08T - 55mm

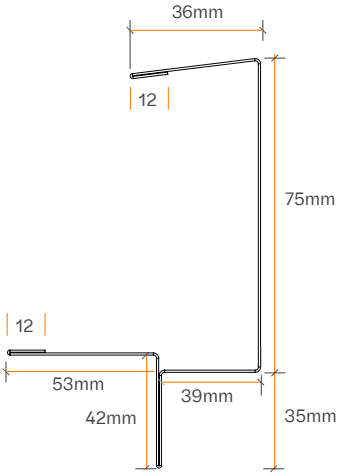

C08TL - 65mm